



SABA

adhesives & sealants



SABA sealant systems

- (Bio)chemical industry
- Infrastructure & civil engineering

a strong bond







Table of contents

SABA adhesives & sealants **3**
Contact persons **4**
Durable polysulphide systems **5**
SABA Sealer MB (self-levelling) and SABA Sealer MB-T (thixotropic) 6
SABA Sealer Field 7
SABA Sealer Fast 8
SABA Sealcoat CR (self-levelling) and SABA Sealcoat CR-T (thixotropic) 9
Durable MS Polymer systems **10**
Sababuild® 650 11
SABA Ecoseal Bio HM 12
SABA Ecoseal 12
SABA Ecoseal AC 13
SABA MS Floor (thixotropic) and SABA MS Floor SL (self-levelling) 14
Sabaprotect M500 15
Sustainable epoxy polysulphide and polyurea systems **16**
SABA Crackfill and SABA Flexform 17
SABA Flexcoat K AND SABA Flexfill 18
Technical drawings **19**
SABA Sealflex system **20**
Certificates and test reports **21**
SABA pre-treatment table **22**
Equipment, advice and guidance for optimal application **26**

SABA adhesives & sealants

SABA, a strong bond

For more than 85 years, the name SABA has stood for premium quality, adhesives and sealants for professional use. With our knowledge of bonding and sealing, we are happy to help you optimise your processes, so that you produce better and more sustainable end products or projects in a safe and efficient way and at lower total costs. Our international establishments together form a single large business with all the advantages this brings, allowing us to get the most out of each other's unique qualities.

Research & Development

Helping customers with innovative products and processes is the driving force for SABA's R&D. We develop and improve all SABA products in our own laboratory. Regular tests, including customer-specific ones, are regularly carried out on the bonding properties, strength and tolerance of the products. Continual work is being done to improve our products with a view to reducing their impact on humankind and the environment. As such,SABA MS Polymers are CMR-free to protect not only the applicator but also the environment..

Support

SABA supplies outstanding products for bonding and sealing in construction and industry. However, a perfect result depends on correct application of our adhesives and sealants. The specialists of our application service work with customers all over the world daily to assist them with advice, support and training for optimal adhesive and sealant application.

Visit our website and follow us online!

www.saba-adhesives.com

Durable polysulphide systems

The SABA system solutions have one thing in common: their durability. Our own R&D department devotes close attention to polysulphide product technology. As a result, the excellent chemical resistance and unique product composition of our polysulphide products offer many benefits.

For more than 25 years, the SABA polysulphide sealant system has proven its value in the most diverse and extreme circumstances. This means that joint seals that were made more than 25 years ago continue to perform effectively today. This makes the SABA concept one of the most durable sealant systems in the world. We continually work to improve our products with a view to reducing their impact on humankind and the environment.
The products are also certified and regular tests, including customer-specific ones, are carried out on the bonding properties, strength and tolerance of the products.

Fields of application for contraction joints, expansion joints or coating systems	SABA Sealer MB	SABA Sealer MB-T	SABA Sealer Field	SABA Sealer Fast	SABA Sealcoat CR	SABA Sealcoat CR-T
Airports, Air site CE14188/2	•		•	•		
Airports, de-icing platforms	•		•	•		
Airports, fuel depot	•		•	•	•	•
Ports, quay walls		•				
Ports, quay paving	•		•	•		
Container trans-shipment			•	•		
Loading platforms	•		•	•		
Parking facilities	•	•	•	•		
Parking deck elements	•	•	•	•		
Bridges/viaducts		•				
Concrete roads				•		
Asphalt concrete	•	•				
Concrete roundabout elements		•	•			
Traffic islands		•	•			
Tunnels	•	•	•			
Concrete industrial/shop floors	•	•	•	•		
Car washes and washing bays	•	•			•	•
Workplaces with a chemical load	•	•	•		•	•
Stadium applications (seating elements)		•				
Fuelling locations/petrol stations	•	•	•		•	•

Fields of application for contraction joints, expansion joints or coating systems	SABA Sealer MB	SABA Sealer MB-T	SABA Sealer Field	SABA Sealer Fast	SABA Sealcoat CR	SABA Sealcoat CR-T
Sewage systems, shafts, wells (petrochemical)	•	•			•	•
Separators (petrochemical)					•	•
Storage tanks, storage basins & silos (petrochemical)		•			•	•
Biodiesel installations	•	•				
Oil refineries/chemical plants	•	•	•	•	•	•
Spill containment units		•	•		•	•
Emergency barriers (retaining walls)		•				
Tension-free floors					•	•
Mechanically loadable floors	•	•	•	•		
Crack solutions	•	•	•		•	•
Other impermeable floors	•	•	•	•	•	•

Note: The best solutions are presented in this list. Nevertheless, a product that is not ticked may be entirely applicable in a particular situation. Please contact SABA if you have any questions or require more information.

SABA Sealer MB (self-levelling)
SABA Sealer MB-T (thixotropic)

SABA Sealer MB and SABA Sealer MB-T are highly chemically resistant and permanently elastic sealants. Solvent-free and based on polysulphide (2-component). Both sealants are suitable for plants used for the storage, bagging or treatment of substances that are hazardous for watery environments and/or where permanent or temporary high chemical resistance is required. SABA Sealer MB is a self-levelling sealant suitable for the impermeable, elastic sealing of horizontal joints. SABA Sealer MB-T is a sealant with high initial bond strength that is suitable for the impermeable, elastic sealing of vertical joints.

Your benefits

- very high chemical resistance (approx. 60% polysulphide)
- max. permissible permanent deformation of 25%
- UV stable
- resistant to extreme climate/weather conditions
- very long service life
- high temperature resistance

Available packaging units

- 0,45 litres: black / gray (MB-T)
- 2,5 litres: black / gray (MB & MB-T)
- 7,5 litres: black / gray (MB & MB-T)
- 15 litres: black / gray (MB)
- 20 litres: black / gray (MB)

The recommended pre-treatment is shown on pages 22/23.

Certificates & test reports

- CE marking based on EN 14188-2, class A-D (MB + MB-T) & EN 15651-4, Type PW 25LM INT-EXT (MB-T)
- DIBt Allgemeine bauaufsichtliche Zulassung: Beschichtungs-systeme Z-74.6-150 (MB) / Z-74.6-155 (MB-T)
- complies with Federal Specification S-SS 200[E]

Potential fields of application

- oil refineries/chemical plants
- fuelling locations/petrol stations
- parking facilities
- biodiesel installations
- Spill containment units

See page 5 for more fields of application.





SABA Sealer Field

SABA Sealer Field is a chemically resistant and permanently elastic sealant. Solvent-free, self-levelling and UV stable, based on polysulphide (2-component). This sealant has been developed for the impermeable and elastic sealing of horizontal expansion joints and cracks in paving surfaces and/or applications.

Your benefits

- very high chemical resistance
- max. permissible permanent deformation of 25% (grey) and 35% (black)
- UV stable
- resistant to extreme climate/weather conditions
- long service life
- free from CMR substances

Available packaging units

- 7.5 litres: black / grey
- 15 litres: black / grey
- 20 litres: black / grey

The recommended pre-treatment is shown on pages 22/23.

Certificates & test reports

- CE marking based on EN 14188-2, class A-D
- DIBt Allgemeine bauaufsichtliche Zulassung: Beschichtungssysteme Z-74.6-149
- complies with Federal Specification S-SS 200[E]

Potential fields of application

- airports, fuel depot
- Concrete industrial/shop floors
- ports, quay paving
- tunnels

See page 5 for more fields of application.





SABA Sealer Fast

SABA Sealer Fast is a chemically resistant and permanently elastic sealant. Self-levelling and UV stable, based on polysulphide (2-component). This sealant is best suited for sealing horizontal joints in paving surfaces made of concrete elements and/or for applications in the civil engineering construction industry.

Your benefits

- fast and efficient application with pump
- high chemical resistance
- max. permissible permanent deformation of 35%
- UV stable
- resistant to extreme climate/weather conditions
- long service life

Potential fields of application

- concrete roads
- mechanically loadable floors
- parking deck elements
- loading platforms

See page 5 for more fields of application.



Available packaging units

- 30 litres: black

The recommended pre-treatment is shown on pages 22/23.

Certificates & test reports

- CE marking based on EN 14188-2, class A-D
- BAM 7.1/15034298
- DIBt Allgemeine bauaufsichtliche Zulassung; Beschichtungssysteme Z-74.6-157



SABA Sealcoat CR (self-levelling)
SABA Sealcoat CR-T (thixotropic)

SABA Sealcoat CR and SABA Sealcoat CR-T are 2-component, chemically resistant and permanently elastic, polysulphide-based coatings. Solvent-free and crack-bridging. SABA Sealcoat CR is ideally suited for coating horizontal surfaces made of concrete, brick, tiles or metal. SABA Sealcoat CR-T is suitable for vertical coating of the same surfaces.

Your benefits

- high chemical resistance
- UV stable
- very flexible
- resistant to extreme climate/weather conditions
- long service life

Available packaging units

- 2.5 litres: grey (CR)
- 7.5 litres: grey (CR)
- 2.5 litres: grey (CR-T)
- 7.5 litres: grey (CR-T)

The recommended pre-treatment is shown on pages 22/23.



Certificates & test reports

- DIBt Allgemeine bauaufsichtliche Zulassung; Beschichtungssysteme Z-59.12-201

Potential fields of application

- storage tanks, storage basins & silos (petrochemical)
- spill containment units
- sewage systems, shafts, wells (petrochemical)
- workplaces with a chemical load

See page 5 for more fields of application.

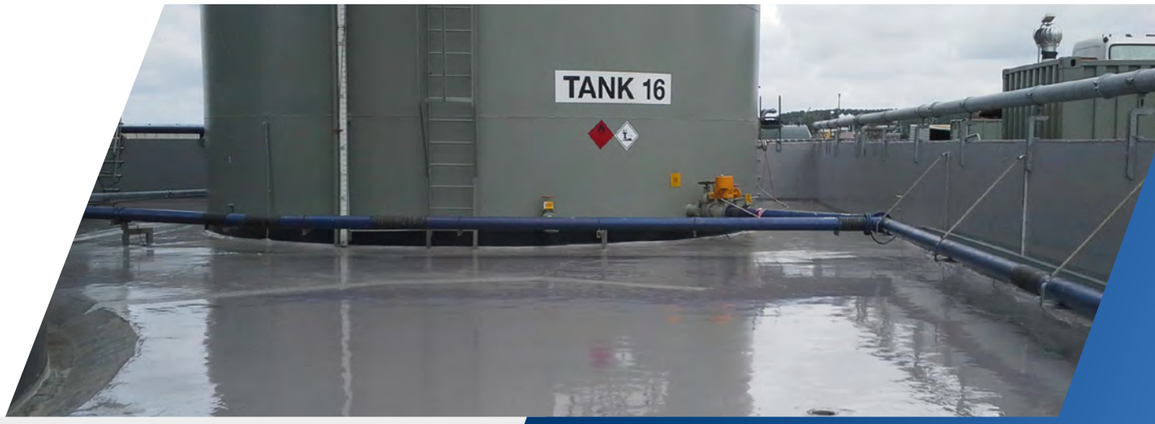

Durable MS Polymer systems

SABA offers you a unique product range, based on MS Polymer technology. The SABA MS Polymer range consists of three groups of 1-component products: microbiologically loadable products, liquid-repellent products and fire-resistant products. The most significant benefits are the broad bonding spectrum and excellent UV stability. All MS Polymer products are also user and environment-friendly because they contain no solvents, silicones or isocyanates. SABA MS Polymers are completely label-free, which means they do not contain any CMR substances either. Both the applicator and the environment are therefore protected.

Areas of application for contraction joints and expansion joints	Sababuild® 650	SABA Ecoseal	SABA Ecoseal AC	SABA Ecoseal Bio HM	SABA MS Floor	SABA MS Floor SL	Sabaprotect M500
Ports, quay walls				•			
Ports, quay paving					•	•	
Container trans-shipment					•	•	
Loading platforms					•	•	
Biochemical bulk trans-shipment				•	•	•	
Parking facilities (facade and wall connections)	•						•
Stairwells	•						•
Roundabouts					•	•	
Concrete industrial/shop floors					•	•	
Car washes and washing bays				•			•
Workplaces with a chemical load					•	•	•
Stadium applications (fire-resistant)							•
Stadium applications (facade and wall connections)	•						•
Mechanically loadable floors				•	•	•	
Other liquid-repellent floors				•	•	•	
Water treatment plants (biochemical)		•	•	•			
Storage tanks, storage basins & silos (petrochemical)		•	•	•			
Biogas tanks/installations			•				
Recycling platforms		•		•	•	•	
Air ducts		•					
Natural stone	•						
Precast concrete	•						•

Note: The best solutions are presented in this list. Nevertheless, a product that is not ticked may be entirely applicable in a particular situation. Please contact SABA if you have any questions or require more information.

Sababuild® 650

Sababuild® 650 is an all-round, permanently elastic sealant. Very low-emission, solventfree, non-sagging, UV-stable and (air) moisture-curing, based on MS Polymer (1- component). Sababuild® 650 is suitable for sealing (expansion) joints in residential and non-residential construction (indoors and outdoors). Due to its very low-emission and label-free properties, it is also suitable for use in BREAAM/LEED projects.

Your benefits

- broad bonding spectrum
- max. permissible permanent deformation of 25%
- universally applicable
- permanently elastic
- can be over-painted with water-based paint systems
- UV stable
- contains no solvents, isocyanates or silicones

Available packaging units

- 600ml sausage pack:
  - white (similar to RAL 9010)
  - pale grey (similar to RAL 7038)
  - concrete grey (similar to RAL 7030)
  - quartz grey (similar to RAL 7039)
  - dark grey (similar to RAL 7021)

The recommended pre-treatment is shown on pages 22/23.

Certificates & test reports

- CE marking based on EN 15651-1, Type F 25LM INT-EXT
- EMICODE EC1 plus
- ISEGA (in connection with HACCP)

Potential fields of application

- facade and wall connections
- stadium applications
- stairwells
- vertical joints

See page 10 for more fields of application.





SABA Ecoseal Bio HM

SABA Ecoseal Bio HM is resistant to mechanical and/or microbiological loads and permanently elastic sealant. Very low-emission, solvent-free, non-sagging, UV-stable and (air) moisture-curing, based on MS Polymer (1-component). SABA Ecoseal Bio HM is especially suited for sealing joints with microbiological loads due to composting processes, drinking water, (sewage) treatment water and joints that are exposed to heavy mechanical loads.

Your benefits

- broad bonding spectrum
- permanently elastic
- high pH value
- contains no solvents, isocyanates or silicones

Available packaging units

- 600ml sausage pack:
- black (similar to RAL 9011)
- grey (similar to RAL 7004)
- winter white (similar to RAL 9001)

The recommended pre-treatment is shown on pages 22/23.

Certificates & test reports

- CE marking based on EN 15651-4, Type PW 25HM INT-EXT
- EMICODE EC1 plus
- KIWA NSF/ANSI 61
- ISEGA (in connection with HACCP)

Potential fields of application

- bridging joints (see page 20)
- Storage tanks, storage basins & silos (petrochemical)
- recycling platforms
- car washes and washing bays
- water treatment plants (biochemical)

See page 10 for more fields of application.



SABA Ecoseal

SABA Ecoseal is an extremely low-emission and permanently elastic sealant. Solvent-free, non-sagging, UV-stable and air/moisture-curing based on MS Polymer (single component). The sealant is suitable for the permanently elastic sealing of a variety of joints/connection joints and overlaps. The extremely low-emission and label-free characteristics make it suitable for air duct applications or in BREAAM projects.

Available packaging units

- 600ml sausage pack:
- black (similar to RAL 9011
- concrete grey (similar to RAL 7030))



Certificates & test reports

- CE marking based on EN 15651-1, Type F 25LM INT-EXT
- EMICODE EC1 plus
- tested according to EN ISO 846 method B, with assessment 0 (no mold growth)

SABA Ecoseal AC

SABA Ecoseal AC is an acid-resistant and permanently elastic sealant. Solvent-free, nonsagging, UV-stable and (air) moisture-curing, based on MS Polymer (1-component). Particularly suitable for sealing joints and/or overlaps in microbiologically stressed conditions that are exposed to acids.

Your benefits

- broad bonding spectrum
- permanently elastic
- low pH value
- high temperature resistance (cf. PU, see page 30 for references)
- contains no solvents
- isocyanates or silicones

Available packaging units

- 600ml sausage pack:
- black (similar to RAL 7021)

The recommended pre-treatment is shown on pages 22/23.

Certificates & test reports

- DIBt Allgemeine bauaufsichtliche Zulassung; Z-74.62-147

Potential fields of application

- water treatment plants (biochemical)
- storage tanks, storage basins & silos (biochemical)
- biogas tanks/installations

See page 10 for more fields of application.



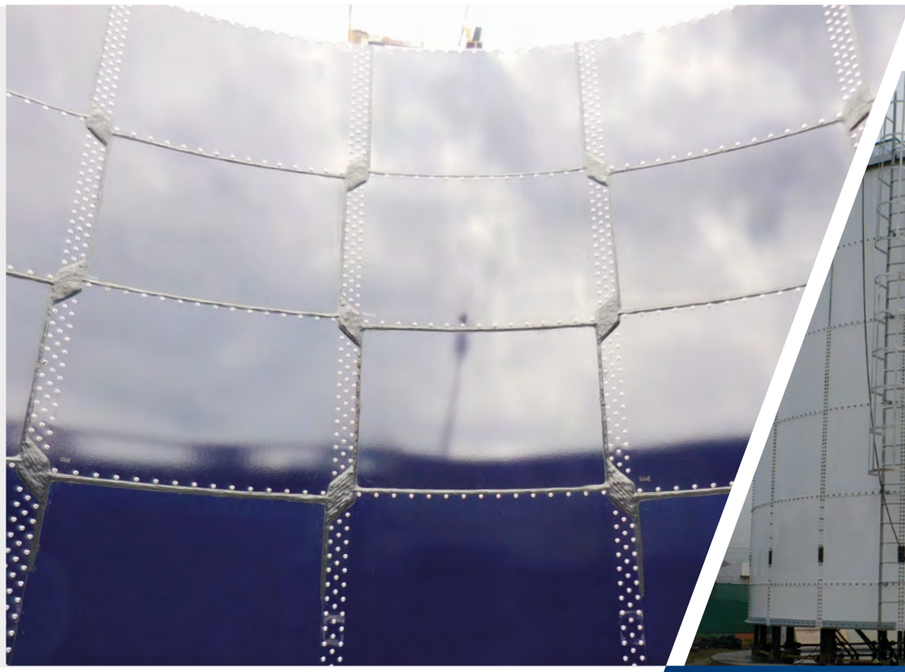





SABA MS Floor (thixotropic)
SABA MS Floor SL (self-levelling)

SABA MS Floor (thixotropic) and SABA MS Floor SL (self-levelling) are 1-component, elastic sealants based on MS polymer suitable for sealing joints in (liquid-repellent) floors. SABA MS Floor SL is self-levelling and spreads itself evenly into the joint.

Your benefits

- broad bonding spectrum
- permanently elastic
- chemically loadable (liquid repellent)
- contains no solvents, isocyanates or silicones

Available packaging units

- 600ml sausage pack:
- black (similar to RAL 9011)
- grey (similar to RAL 7036)

The recommended pre-treatment is shown on pages 22/23.

Certificates & test reports

- CE marking based on EN 14188-2, class A (MS Floor + MS Floor SL) & EN 15651-4, Type PW 25LM INT-EXT (MS Floor)
- EMICODE EC1 plus (MS Floor)
- ISEGA (in connection with HACCP) 42525 U 16
- Atest PZH

Potential fields of application

- container trans-shipment
- ports, quay paving
- roundabouts
- workplaces with a chemical load

See page 10 for more fields of application.





Sabaprotect M500

Sabaprotect M500 is a 1-component, smoke-resistant and fire-resistant, permanently elastic (air) moisture-curing sealant based on MS polymer. Sabaprotect M500 is primarily suited for smoke-resistant and fire-resistant (for up to 120 minutes) sealing of (expansion) joints up to 50 mm wide, for example between stony materials, wood, steel, plasterboard and plaster fiber boards.

Your benefits

- fire-resistant up to 120 minutes with standard back foam
- can be over-painted with water-based paint systems
- permanently elastic
- EMICODE EC1 Plus certified
- contains no solvents, isocyanates or silicones

Available packaging units

- 600ml sausage pack:
- signal white (similar to RAL 9003)
- silk grey (similar to RAL 7044)
- signal black (similar to RAL 9004)

The recommended pre-treatment is shown on pages 22/23

Certificates & test reports

- CE marking based on EN 15651-1, Type F 25LM INT-EXT & EN 15651-4, Type PW 25LM INT-EXT
- ISEGA (in connection with HACCP)
- complies with EMICODE EC1 plus
- tested in conformity with EN 13501-2:2007+A1:2009

Potential fields of application

- parking facilities
- stadium applications
- stairwells
- car washes and washing bays
- timber frames, metal studs, walls, ceilings and/or door/window frames.

See page 10 for more fields of application.



Sustainable epoxy polysulphide and polyurea systems

SABA has for years been a leader in the development and production of adhesives and sealants. The range of epoxy polysulphide products consists of 2-component products with very high chemical resistance, both self-levelling and thixotropic.

SABA has for years been a leader in the development and production of adhesives and sealants. The products are excellent for impermeable, abrasion and shock resistant sealing and can withstand significant temperature fluctuations. These products lend themselves extremely well to repairs of concrete and can be applied as a coating against biochemical and chemical loads. For joints with limited movement that can be subjected to heavy mechanical stresses, choose the polyurethane-urea-based product.

Fields of application for repairs of concrete, cracks or coating systems	SABA Crackfill	SABA Flexform	SABA Flexcoat K	SABA Flexfill
Ports, quay walls		•	•	
Ports, quay paving	•	•		
Container trans-shipment	•	•		•
Loading platforms	•	•		•
Loading platforms		•		
Loading platforms		•		
Concrete roads		•		
Tunnels	•	•		
Concrete industrial/shop floors	•	•		•
Car washes and washing bays	•	•	•	
Workplaces with a chemical load	•	•	•	
liquid-proof barriers/mechanically loadable barriers		•		
Fuel storage/sales points	•	•	•	
Sewage systems, shafts, wells (petrochemical)			•	
Sewage systems, shafts, wells (biochemical)			•	
Storage tanks, storage basins & silos (petrochemical)	•		•	
Storage tanks, storage basins & silos (biochemical)	•		•	
Separators (petrochemical)			•	
Separators (biochemical)			•	
Biodiesel installations	•		•	
Oil refineries/chemical plants			•	
Spill containment units	•	•	•	
Mechanically loadable floors	•	•	•	•
Crack solutions	•			
Other liquid-repellent floors	•	•	•	

Fields of application for repairs of concrete, cracks or coating systems	SABA Crackfill	SABA Flexform	SABA Flexcoat K	SABA Flexfill
Other impermeable floors	•	•	•	
Water treatment plants (biochemical)			•	
Biogas tanks/installations			•	
Recycling platforms	•	•		•

Note: The best solutions are presented in this list. Nevertheless, a product that is not ticked may be entirely applicable in a particular situation. Please contact SABA if you have any questions or require more information.

SABA Crackfill

SABA Crackfill is a hard 2-component, self-levelling epoxy polysulphide-based filler. SABA Crackfill is especially suited for sealing and repair of contraction cracks and cracks that form spontaneously in concrete or sand cement floating floors.

Your benefits

- chemically resistant
- hardness Shore D of 40 approx.
- wear and shock resistant
- contains no solvents

Potential fields of application

- fuel storage/sales points
- storage tanks, storage basins & silos (petrochemical)
- storage tanks, storage basins & silos (biochemical)

See page 16 for more fields of application.

Available packaging units

- 2 litres: grey
- 6 litres: grey

The recommended pre-treatment is shown on pages 22/23.



SABA Flexform

SABA Flexform is a 2-component, epoxy polysulphide-based filler. SABA Flexform is suitable for use as a repair/smoothing mortar and for the application of liquid-proof barriers on concrete industrial and other floors.

Your benefits

- chemically resistant
- hardness Shore D of 70 approx.
- wear and shock resistant
- contains no solvents

Potential fields of application

- spill containment units
- container trans-shipment
- concrete industrial/shop floors
- liquid-proof barriers/mechanically loadable barriers

See page 16 for more fields of application.

Available packaging units

- 1.5 litres: grey
- 5 litres: grey

The recommended pre-treatment is shown on pages 22/23.



SABA Flexcoat K

SABA Flexcoat K is a 2-component, thixotropic, crack-bridging coating based on epoxy polysulphide. SABA Flexcoat K is especially appropriate for the protection of oil and grease separators, tanks and silos or waste water treatment plants, sewer drains and spill containment units against chemical and biochemical loads.

Your benefits

- high chemical resistance
- solvent-free
- flexible
- applicable in 1 work day and loadable within 24 hours
- wear and shock resistant
- resistant to temperature fluctuations

Available packaging units

- 2 litres: grey
- 6 litres: grey

The recommended pre-treatment is shown on pages 22/23.

Certificates & test reports

- complies with DIN EN 858-1 & DIN EN1825-1

Potential fields of application

- separators (biochemical)
- separators (petrochemical)
- sewage systems, shafts, wells (biochemical)
- sewage systems, shafts, wells (petrochemical)

See page 16 for more fields of application.



SABA Flexfill

SABA Flexfill is a 2-component, self-levelling, solvent-free and wear-resistant casting mass based on polyurethane-urea, which remains permanently elastic and is UV-stable. SABA Flexfill has been developed for joints with limited movement that can be subjected to heavy mechanical stresses. Suitable for functional filling of gaps in paving structures made of (prefab) concrete elements, possibly with connections to asphalt concrete.

Your benefits

- Shock-absorbing
- Noise-reducing
- Strong mechanical properties
- High wear resistance
- Can be used as a top seal in the SABA Double Joint system

Available packaging units

- 6 litres: grey

The recommended pre-treatment is shown on pages 22/23.

Potential fields of application

- *Mechanically loadable floors*
- *Concrete industrial/shop floors*
- *Loading platforms*
- *Container trans-shipment*
- *Recycling platforms*





Technical drawings

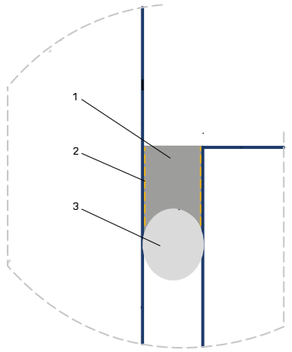

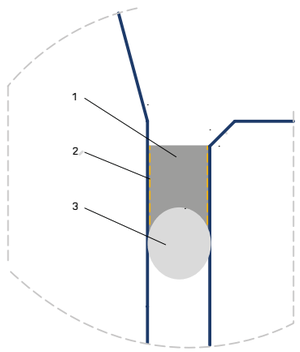

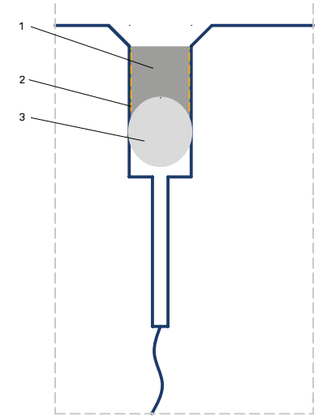

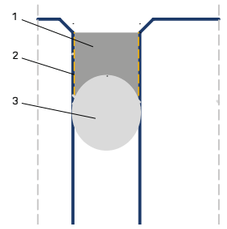

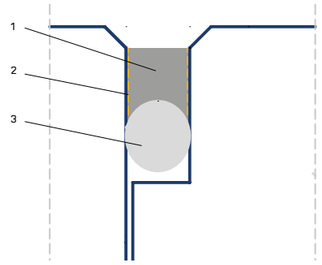

Legend

1 - Sealer
2 - Primer
3 - Backfoam/Rolyfoam

SABA Sealflex system

Concrete structures often bear sharply varying loads. This makes movements in the main expansion joints unpredictable. Naturally, you want to be able to rely on a durable seal under all circumstances. This is why we developed the SABA Sealflex systems. With these, you can realize impermeable seals for the most complex bridging joints. The bridging joint can accommodate movements of up to 25 millimetre without problems.

SABA offers two Sealflex systems based on different sealants: 1 or 2-component and MS-Polymer or polysulphide. The choice depends mainly on the micro-biological or chemical load and the preferences of the processor.

Movement to be absorbed	Width of separation tape	Width of strip	Width of adhesion surface	Width of reinforcing net	Layer thickness
< 2 mm	10 mm	80 mm	35 mm	60 mm	5 mm
< 5 mm	20 mm	120 mm	50 mm	100 mm	6 mm
< 10 mm	40 mm	150 mm	55 mm	130 mm	7 mm
< 15 mm	60 mm	200 mm	70 mm	180 mm	8 mm
< 20 mm	80 mm	250 mm	85 mm	230 mm	9 mm
< 25 mm	100 mm	300 mm	100 mm	280 mm	10 mm

For absorbing movements > 25 mm contact SABA for project advice. Project-dependent deviations from this table are possible. It is recommended that a safety margin should be included when determining the settling at the joints to be absorbed.

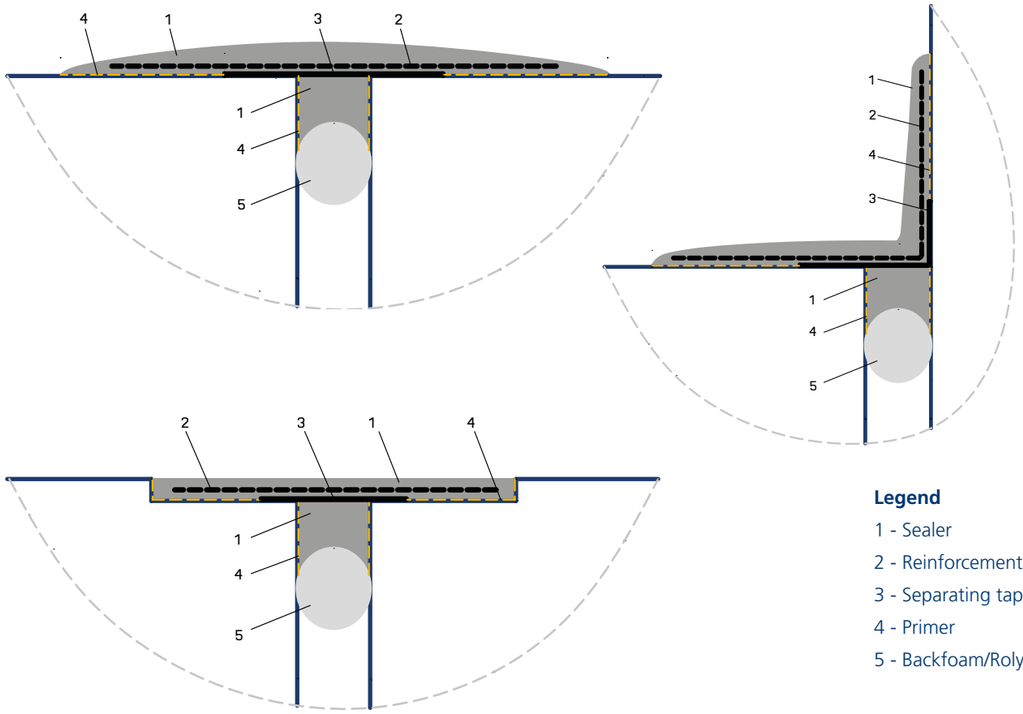

Legend
1 - Sealer
2 - Reinforcement strip
3 - Separating tape
4 - Primer
5 - Backfoam/Rolyfoam

Certificates and test reports

CE Marking

CE Marking indicates that the product complies with statutory health, safety and environmental requirements within the European Economic Area.

The following have been certified:
SABA Sealer MB
SABA Sealer MB-T
SABA Sealer Field
SABA Sealer Fast
Sababuild 650
SABA Ecoseal
SABA Ecoseal Bio HM
SABA MS Floor
SABA MS Floor SL
Sabaprotect M500

DIBT AbZ

The DIBt (German institute for construction technology) grants an AbZ for products within specific areas of use to which no generally applicable rules apply or where there are significant differences. It is a German approval but it is also accepted in other countries.

The following have been certified:
SABA Sealer MB
SABA Sealer MB-T
SABA Sealer Field
SABA Sealer Fast
SABA Sealercoat CR
SABA Sealercoat CR-T
SABA Ecoseal AC

Emicode

The Emicode quality mark categorises the release of volatile organic compounds (VOC) during or immediately after the application of the product. Products with an EC1 PLUS code provide the best possible protection for the processor, client and user. This also makes the products especially suitable for use within BREAAM and LEED projects.

The following have been certified:
Sababuild 650
SABA Ecoseal Bio HM
SABA Ecoseal
SABA MS Floor
Sabaprotect M500

ISEGA

Declaration of no objection to using the sealant in the food industry. This quality mark guarantees that these products can be used safely in areas where work is done in accordance with the HACCP concept.

The following have been certified:
Sababuild 650
SABA Ecoseal Bio HM
SABA MS Floor
SABA MS Floor SL
Sabaprotect M500

KIWA NSF/ANSI 61

The use of NSF/ANSI 61 certified products guarantees that the components will not release any contaminants into the drinking water, which means that the sealant will not affect the quality of the drinking water in terms of either odour or flavour.

The following has been certified:
Ecoseal Bio HM

Performance Test BAM

Sustainability test for joint systems in prefabricated or other concrete paving structures that are driven on. Performed and certified for a minimum of 12 cycles by the Bundesanstalt für Materialforschung und -prüfung (BAM).

The following has been certified:
SABA Sealer Fast

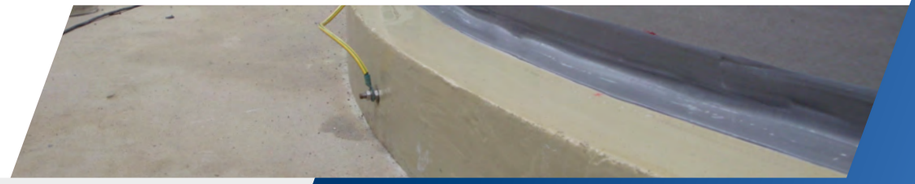

SABA pre-treatment table

		Polysulphide products SABA Sealer MB & MB-T SABA Sealer Field SABA Sealer Fast SABA Sealcoat CR & CR-T	**MS Polymer products** Sababuild® 650 SABA Ecoseal SABA Ecoseal AC SABA Ecoseal Bio HM SABA MS Floor SABA MS Floor SL Sabaprotect M500	**Epoxy polysulphide products** SABA Crackfill SABA Flexform SABA Flexcoat K SABA Flexfill
Mineral	Concrete	Primer H17	Primer 9002	Primer H17
	Pointing	Primer H17	Primer 9002	Primer H17
Ceramic	Tiles	Primer 9102	Primer 9002	Primer 9102
	Ceramic tiles	Primer 9102	Primer 9002	Primer 9102
	Floor tiles (double-fired)	Primer 9102	Primer 9002	Primer 9102
Metal	Metal frames, untreated	Primer 9102	Primer 9102	Primer 9102
	Steel frames	Primer 9102	Primer 9102	Primer 9102
	Aluminium	Primer 9102	Primer 9102	Primer 9102
	Enamel	Primer 9102	Primer 9102	Primer 9102
	Stainless steel	Primer 9102	Primer 9102	Primer 9102
Plastics	Polyester and vinyl gutters	Cleaner 22 & Primer 9102	Cleaner 22 & Primer 9102	Cleaner 22 & Primer 9102
	PU drains	Primer 9102	Cleaner 48 & Primer 9102	Primer 9102
	Trespa panelling	Primer 9102		Primer 9102
	Hard PVC	Primer H17	Primer 9102	Primer H17
	PVC foil	Primer H17	Primer 9102	Primer H17
Paint	PU coatings	Primer 9102	Primer 9002	Primer 9102
	Epoxy coatings	Primer 9102	Primer 9002	Primer 9102
	Alkyd paint	Primer H17	Cleaner 48	Primer H17
	Water-based paint		Cleaner 48	
	Dried enamel	Primer H17	Primer 9102	Primer H17
Other	Asphalt*	Primer 9911		Primer 9911

* In consultation with the supplier.

Bonding surfaces must be clean, dry and free of dust and grease. Our recommendations and instructions for use are based on the present state of the art. Customers and users must themselves evaluate our products in terms of the use and the requirements of their choice. We accept no liability if our products are not used in accordance with our recommendations and/or instructions for use.



SABA pre-treatment products



SABA Primer H17

A 2-component epoxy primer for pre-treatment of porous substrates. Complies with EN 14188-4.

Your benefits

- contains no isocyanates
- drying time of 30 minutes
- open time of 6 hours

Available packaging units

- 500ml: 100324
- 900ml: 100324
- 4 litres: 100324



SABA Primer 9102

A 1-component primer for pre-treatment of non-porous substrates, metals and synthetics. Complies with EN 14188-4.

Your benefits

- contains no isocyanates
- drying time of 10 minutes
- open time of 24 hours

Available packaging units

- 1 litre: 100331



SABA Primer 9002

A 1-component primer for pre-treatment of various porous and non-porous substrates, metals and synthetics. Complies with EN 14188-4.

Your benefits

- contains no isocyanates
- drying time of 15 minutes
- open time of 4 hours

Available packaging units

- 250 ml: 100482
- 500 ml: 100482



SABA Primer 9911

A 2-component epoxy primer for pre-treatment of bituminous substrates.

Your benefits

- contains no isocyanates
- drying time of 30 minutes
- open time of 6 hours

Available packaging units

- 500 ml: 100485





Sabaclean 22

A universal cleaning agent for cleaning substrates and materials to be sealed.

Your benefits

- drying time of 5 minutes
- cleans very thoroughly

Available packaging units

- 1 litre: 100191
- 5 litres: 100191



Sabaclean 48

A universal cleaning agent for cleaning materials to be sealed.

Your benefits

- cleans very thoroughly

Available packaging units

- 1 litre: 100193
- 5 litres: 100193

Equipment, advice and guidance for optimal application

In addition to a complete range of application equipment, our SABA application specialists offer advice, support and training for optimal adhesive and sealant application. The specialists of our application service work with customers all over the world every day. Thanks to our close contacts with the main suppliers of application equipment, we can advise you on which application equipment will give you the best result, so that you save a great deal of time in your project or production process. In the long term you also save costs, thanks to optimal quality.

Do you need expert advice or training in the application of adhesives or sealants? We would be happy to tell you more about our efficient solutions. Feel free to contact the specialists of our application service for personalized advice on adhesive or sealant application. **Overview of SABA application equipment:**

SABA Gun HKK 450 (Art. No. 500084)
Manual spray gun suitable for applying sealant in cartridges of about 450 ml



SABA Gun LKK 450 (Art. No. 500085)
Pneumatic spray gun suitable for applying sealant in cartridges of about 450 ml.



SABA Airflow Plus 600ml (Art. No. 500615)
Pneumatic spray gun suitable for applying sealant in sausages of 400 and 600 ml.



SABA Gun LKB 2500 RV (Art. No. 500090)
Pneumatic spray gun with a capacity of about 600 ml.



SABA Gun LKB 7500 RV (Art. No. 500091)
Pneumatic spray gun with a capacity of about 2.5 litres.



Available Nozzles

- Nozzle HB (HKK450): Art. No. 50000650



- Nozzle P (LKB7500): Art. No. 50000640



- Nozzle K (LKK450): Art. No. 50000645



- Cox Nozzle (Lance LD40): Art. No. 50000433



- Mixer nozzle: Art. No. 50000740



Graco SSF 501/XP50
This application cart was developed in close cooperation with a machine supplier for the application of SABA Sealer Fast. For more information, please contact us.
For application with other equipment,
please contact SABA in advance.



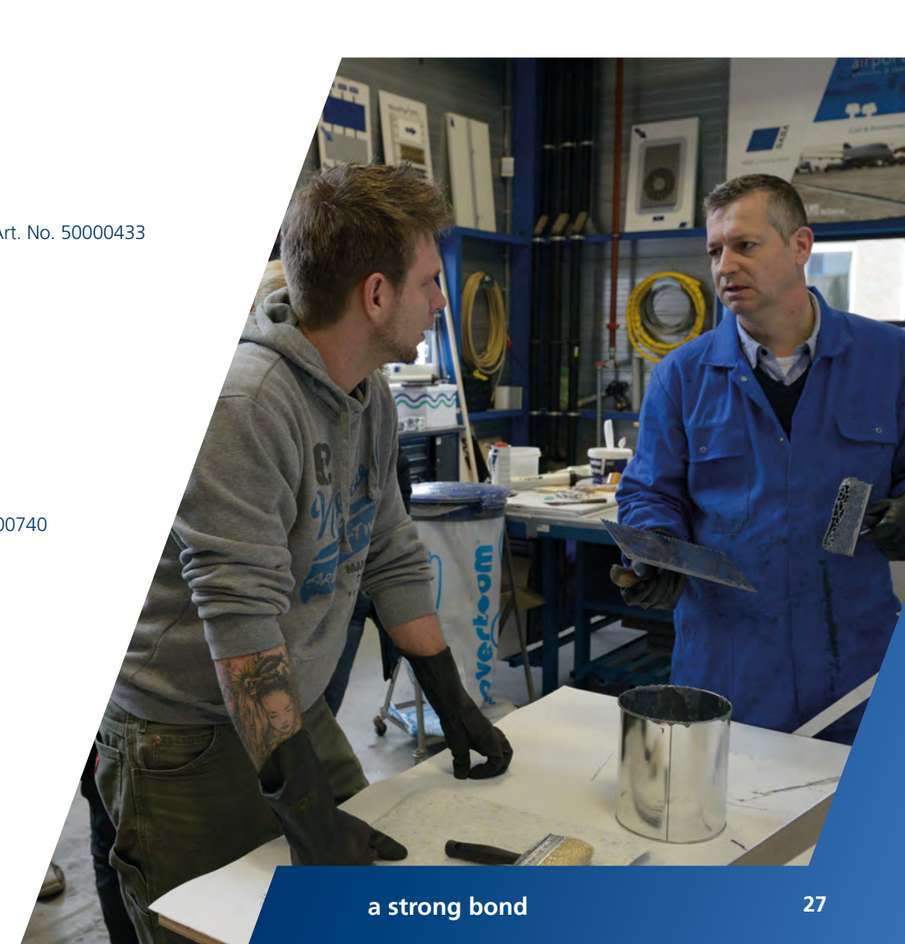

Pressure vessel (Art. No. 550199)



SABA Lance LD 40 + accessories
(Art. No. 500537 + Art. No. 500564)
Spray lance suitable for applying large volumes of sealant in combination with a pressure vessel.



SABA Spiraal MKK450 + SABA Mixer MKK 450
(Art. No. 500087 + Art. No. 500088)
Mixing set suitable for mixing sealant in cartridges of about 450 ml.



SABA Mixer Universal (Art. No. 500490)
Universal mixing set suitable for mixing sealant in cans of 7.5, 15 and 20 litres.



SABA Pressure plate LKB 2500 - 2.5 litres
(Art. No. 500259)
Pressure plate for 2.5 litre cans for use in combination with SABA Gun LKB 2500 RV.

SABA Pressure plate LKB 7500 - 2.5 litres
(Art. No. 500272)
Pressure plate for 2.5 litre cans for use in combination with SABA Gun LKB 7500 RV.

SABA Pressure plate LKB 7500 - 7.5 litre
(Art. No. 500437)
Pressure plate for 7.5 litre cans for use in combination with SABA Gun LKB 7500 RV.



SABA Backfoam
SABA Backfoam is a polyurethane foam backing material with a closed cell structure. It is especially suitable for use in continuous joints to obtain the correct layer thickness and prevent three-sided adhesion. SABA Backfoam is also resistant to solvents.

- 10 mm +1/-0 mm (600 m): 500069
- 13 mm +1/-0 mm (400 m): 500070
- 16 mm +1/-1 mm (250 m): 500071
- 20 mm +1/-1 mm (150 m): 500072
- 24 mm +1/-1 mm (100 m): 500073
- 30 mm +1/-1 mm (80 m): 500074
- 40 mm +1/-1 mm (120 m): 500143



SABA Rolyfoam
SABA Rolyfoam is a polyurethane foam backing material with an open cell structure. It is especially suited for filling joints in order to obtain the correct depth and to prevent three-sided adhesion.

- 15 mm (250 m): 500075
- 20 mm (200 m): 500076
- 25 mm (100 m): 500077
- 30 mm (100 m): 500078
- 35 mm (50 m): 500079
- 40 mm (40 m): 500080
- 50 mm (40 m): 500081



SABA Reinforcement Strip
SABA Reinforcement Strip is a ready-to-use strip for creating the necessary cohesion in bridging joint systems (SABA Sealflex) and increasing resistance to point loads.

- 8 cm (50 m): 500067
- 10 cm (50 m): 500066
- 13 cm (50 m): 500136
- 18 cm (50 m): 500208
- 23 cm (50 m): 500266
- 28 cm (50 m): 500267
- 100 cm (50 m): 500068





References

On this page you will find a list of national and international reference projects where our products and systems are applied. For more references, please contact one of the SABA contacts on page 4.

More than 5,000 references worldwide:

(Petrol) chemical industry
- Shell
- Aramco
- Agip KCO
- BP
- Akzo Nobel
- Vopak
- Dow Chemicals
- Huntsman

Ports (container terminals)
- Port of Antwerp
- ECT European Container Terminal Rotterdam
- Port of Gdansk
- Port of Copenhagen
- Port of Paramaribo
- Port of Hamburg
- Port of Lumut Malaysia
- Port of Bristol

Stadiums
- Queen Elizabeth Olympic Park London
- Stadion Wisla Krakow
- Ullevi Stadium Göteborg
- Thialf Iceskate Stadium Heerenveen
- PSV Stadium Eindhoven
- Baltic Arena Gdańsk
- Royal Arena Copenhagen

Airports
- Amsterdam Airport Schiphol
- Chopin International Airport Warsaw
- International Airport Frankfurt am Main
- Airport Charles de Gaulle Paris
- Madrid Barajas International Airport
- Moskou Sheremetyevo Airport
- Keflavík International Airport
- Bahrain International Airport
- Blaise Diagne International Airport
- Airport Tallinn Lennart Meri
- Tan Son Nhat Airport, Ho Chi Minh

Parking decks
- IKEA (several locations)
- Parking garage Bijenkorf Amsterdam
- Parking garage Q-Park Filosofgangen Odense
- Parking garage Nürnberg
- Parking garage Wańkowicza Warsaw
- Parking garage Sint Franciscus Gasthuis, Rotterdam
- Various parking decks in Gotenborg, Sweden

Tanks & silos
- The Netherlands – Storage tank for oil and fat waste
- Austria - Biodiesel tank, capacity 4.000 m³, temp. 60 °C
- Germany – Waste tank for water of Coca-Cola
- Poland - Biogas reactor, 12 x 12 x 75 m, temp. 20-40 °C
- Hong Kong – Storage tank for fat waste, temp. 85-90 °C
- Middle East - Biogas reactor, 500 m³, temp. 50-55 °C

Notes

adhesives & sealants

SABA adhesives & sealants

SABA Dinxperlo BV, head office
Weversstraat 6, NL-7091 CM Dinxperlo
Postbus 3, NL-7090 AA Dinxperlo
T +31(0)315 65 89 99 **F** +31(0)315 65 89 89

building@saba-adhesives.com

www.saba-adhesives.com

Follow us on:

Our recommendations and instructions for use are based on current knowledge and the present state of the art. Customers and users should evaluate our products by themselves, with regard to their required utilization and other requirements. We accept no responsibility in case our products are not being used as per our recommendations and/or instructions for use. Our general terms and conditions apply to all requests, instructions for use, quotations, orders, and agreements. These general terms and conditions have been filed with the Arnhem Chamber of Commerce under number 09065419 and can also be viewed on our website at www.saba-adhesives.com On your request, a copy of these terms and conditions will be sent free of charge. The general terms and conditions incorporate a limitation of SABA Dinxperlo BV's liability, as well as the choice of Netherlands law as the applicable law and choice of the courts of the Netherlands as the forum. Any disputes ensuing from or relating to requests, instructions for use, quotations, orders, and agreements of SABA Dinxperlo BV must be brought before the competent court in the district were SABA Dinxperlo BV is based.

Sep 2019 | Version 6

a strong bond